FLOOR KIOSK STAND

FOR POS SYSTEM

STABLE & SECURE
Sturdy steel construction with a weighted base keeps your POS system safe and steady.

SLEEK & MODERN DESIGN
Professional look that complements any retail environment.

OPTIMIZED VIEW & USABILITY
Ergonomic height and angle for easy viewing and smooth touch interaction.

INTEGRATED & EFFICIENT
Built-in printer mount keeps transactions quick and operations efficient.

EASY TO SET UP
Quick, tool-free setup gets your POS system ready in minutes.

DURABLE BUILT TO LAST | PROFESSIONAL LOOK ENHANCE YOUR BRAND | BETTER CUSTOMER EXPERIENCE FASTER & SMOOTHER CHECKOUT | INCREASE SALES IMPROVE PERFORMANCE

FEATURES

VESA Mounting Panel
75x75/100x100mm
Support landscape or portrait mounting

Printer Space

Lockable Cable Room

Cable Routing Hole

Offer Various Commercial Service

The KFS-130 stand is made of SPCC sheet metal configuration. It is optionally equipped with screen, printer, card reader, scanner, or camera to work as a self-ordering kiosk,ticket kiosk and checkout kiosketc. Compatible with screens from 15.6 to 27 inch.

Ticket Collection

Ordering

Checkout

Floor Standing/Countertop Application

The KFS-130 stand consists of the detachable upper and lower sections. The upper section isavailable to combined with a base to work as countertop kiosk. It is flexible for floor standingor countertop upon your commerical application demand.

APPLICATIONS

Information desks

Libraries

Car dealerships

Shopping malls

SPECIFICATIONS

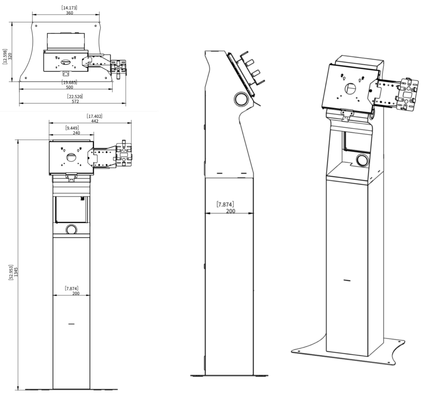

Model No.	AON-PKP200
Compatible Screen	15.6 - 27inch
Material	SPCC
Surface Finishing	Power coating
Overall Size	590(W)*350(D)*134.5(H)CM
Package	330(W)x255(D)X575(H) (countertop) 250(W)x250(D)X865(H) (floor-standing)
Net Weight	7.3kgs (countertop)/ 8.2 kgs(floor-standing)
Gross Weight	9.1kgs (countertop) / 10.3kgs (floor-standing)